PART'S OF PAU3.71.A2-00 HP0,75 3x200-240 / 346-415 Hz50
MHI CODE 1R200027

PERCLORETHYLENE SOLVENT

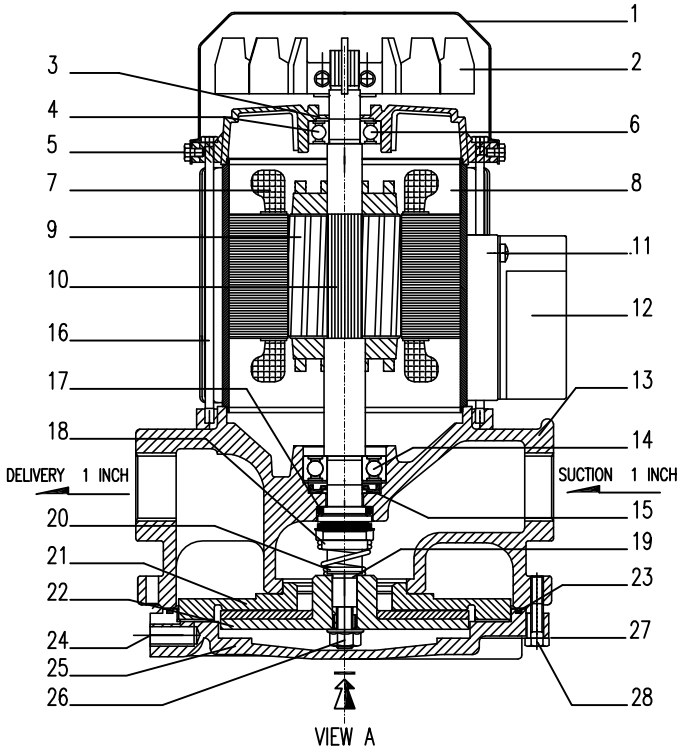

1	10.42.1003	FAN COVER
2	10.47.0030	PLASTIC FAN
3	10.04.0040	SHAFT SPRING
4	10.03.1003	TOP BEARING 6202 zz
5	10.20.63509.F	SCREW 3.5x13
6	31.46.0031.1	TOP SHIELD
7	50.02.70100	WINDING FOR Hz50
8	60.02.75100	MOTOR CASE AND WINDING FOR Hz50
9	40.10.8450	ROTOR + SHAFT
10	01.01.8450	STEEL MOTOR SHAFT
11	10.20.63513	SCREW 3.5x13
12	10.40.1003	PLASTIC COVER BOX
13	30.06.8000	BODY PUMP
14	10.03.1004	BOTTOM BEARING 6203zz
15	10.05.V1732	VITON SEAL 32x17x6
16	10.21.05142	MOTOR ASSEMBLING SCREW M5x142
17	20.06.TENFIS	VITON SHAFT SEAL
18	20.06.TENROT	ROTATIVE VITON SEAL
19	–	IMPELLER SHIM # 0,2
20	10.05.1562100	SPRING FOR SEAL
21	30.06.7100	LIQUID DIFFUSER
22	30.06.2410.S	ROTATIVE IMPELLER FOR Hz50
23	10.06.0003	BOTTOM VITON O RING
24	10.02.0009	1/4 STOPPER
25	30.06.3200.1	BOTTOM PUMP COVER
26	10.25.4010	AUTOBLOCK NUT M10x1
27	10.30.1006	WASHER D.6
28	10.20.20625	SCREW M6x25

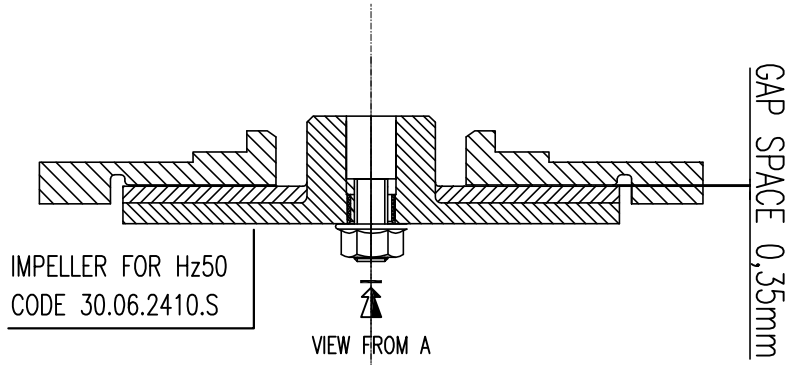

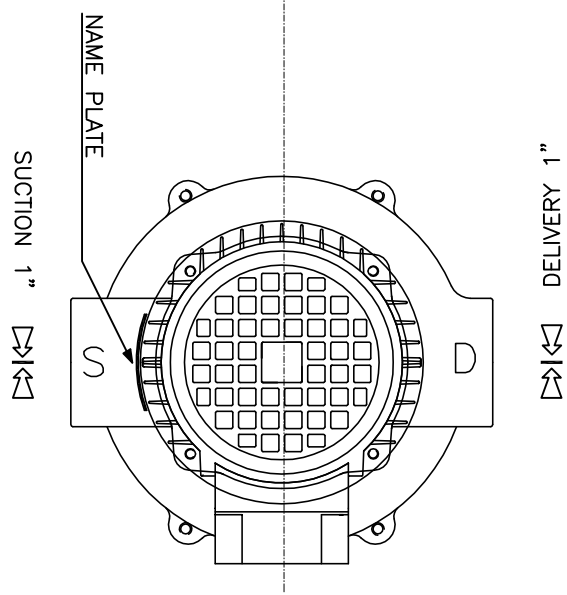

TOP ASSEMBLING VIEW